RIKÄ
QUALITY GUARANTEED.

Owner's Operating Manual
Model No: RK40SAG125B

RK40V
BRUSHLESS TECHNOLOGY

Cordless Angle Grinder

IMPORTANT! PLEASE READ THESE INSTRUCTIONS CAREFULLY. NOTE ALL SAFETY INSTRUCTIONS AND WARNINGS. USE THE PRODUCT CORRECTLY AND WITH CARE FOR THE PURPOSE FOR WHICH IT IS INTENDED. FAILURE TO FOLLOW THESE INSTRUCTIONS MAY CAUSE DAMAGE TO PROPERTY AND/OR PERSONAL INJURY.

KEEP THESE INSTRUCTIONS SAFE AND AVAILABLE FOR FUTURE REFERENCE.

Certificate of Guarantee

This product is guaranteed for a period of 1 year, with effect from the date of purchase and applies only to the original purchaser. The warranty can be extended a further 2 years by registering the purchase on **rikapowertools.com** within 30 days of purchase. This guarantee applies to defects arising from, defective materials or faulty workmanship that become evident during the guarantee period only and does not include consumable items. The manufacturer will either repair or replace the product at their discretion, subject to the following.

That the product has been used in accordance with the guidelines as detailed in the product manual and that it has not been subject to misuse, abuse or used in a purpose for which it was not intended. That it has not been taken apart or tampered with in any way whatsoever or has been service by unauthorised persons or has been used for hire purposes.

Transit damage and accessories are excluded from this guarantee.

Claims made under this guarantee must be made directly to Customer Service:
01332 576 850 within the guarantee period. Receipt and proof of purchase required.

The manufacturer shall not be liable for any special, exemplary, direct, indirect, incidental or consequential loss or damage under this guarantee.

Introduction

Thank you for purchasing this product which has passed through our extensive quality assurance process. Every care has been taken to ensure that it reaches you in perfect condition. However, in the unlikely event that you should experience a problem, or if we can offer any assistance or advice please do not hesitate to contact our customer service.

Safety First
Before attempting to operate this product the following basic safety precautions should always be taken to reduce the risk of fire, electric shock and personal injury. It is important to read the instruction manual to understand the application, limitations and potential hazards associated with this product.

After-Sales Service

Should you require any further assistance regarding your product or in the unlikely event of a defect occurring, please contact us at **rikapowertools.com**. When contacting us, be ready to provide the product Model No: and the serial number found on the product.

Important Safety Instructions

Due to continued product refinement policy, product features and specifications can and will change without notice.

Check current features and specifications with your retailer.

The purpose of safety rules is to attract your attention to possible dangers. The safety symbols and the explanations with them, require your careful attention and understanding. The safety warnings do not by themselves eliminate any danger. The instruction or warnings they give are not substitutes for proper accident prevention measures.

SAFETY ALERT SYMBOL

Indicates danger, warning, caution or notice. May be used in conjunction with other symbols or pictures.

DANGER indicates a hazardous situation which, if not avoided, will result in death or serious injury.

WARNING indicates a hazardous situation which, if not avoided, could result in death or serious injury.

CAUTION indicates a hazardous situation which, if not avoided, could result in minor or moderate injury.

NOTICE indicates information considered important, but not hazard-related (e.g., messages relating to property damage).

Failure to obey a safety warning can result in serious injury to yourself or to others. Always follow the safety precautions to reduce the risk of fire, electric shock and personal injury.

Do not attempt to operate this tool until you have read thoroughly and completely understood the safety rules, etc. contained in this manual. Failure to comply can result in accidents involving fire, electric shock or serious personal injury. Save this Owners Operating Manual and review it frequently for continual safe operation and for instructing others who may use this tool.

SPECIFIC SAFETY INSTRUCTIONS

WARNING! This power tool is intended to function as a grinder, sander, wire brush or cut-off tool. Read all safety warnings, instructions, illustrations and specifications provided with this power tool. Failure to follow all instructions listed may result in electric shock, and/or serious injury.

Operations such as polishing are not recommended to be performed with this power tool. Operations for which the power tool was not designed may create a hazard and cause personal injury.

Do not use accessories which are not specifically designed and recommended by the tool manufacturer. Just because the accessory can be attached to your power tool, it does not assure safe operation.

The product is not intended for use by children or persons with reduced physical, sensory, or mental capabilities, or lack of experience and knowledge.

Children should be adequately supervised to ensure they do not play with the product.

WARNING! Some dust particles created by power sanding, sawing, grinding, drilling and other construction jobs contain chemicals known to cause cancer, birth defects or other reproductive harm. Some examples of these chemicals are:

- Lead from lead-based paints.

Important Safety Instructions

- Crystalline silica from bricks and cement and other masonry products.
- Arsenic and chromium from chemically treated timber.

WARNING! If you suspect that paint on surfaces in your home contains lead, seek professional advice. Lead based paints should only be removed by a professional and you should not attempt to remove it yourself. Once the dust has been deposited on surfaces, hand to mouth contact can result in the ingestion of lead. Exposure to even low levels of lead can cause irreversible brain and nervous system damage. Young and unborn children are particularly vulnerable.

Do not expose to rain or water.

Wear hearing protection when necessary. Exposure to noise can cause hearing loss.

WARNING! The operation of any power tool can result in foreign objects being thrown towards your eyes, which could result in severe eye damage. Before beginning power tool operation, always wear safety goggles or safety glasses with side shield or a full face shield where needed.

Wear personal protective equipment. Depending on application, use face shield, safety goggles or safety glasses. As appropriate, wear dust mask, hearing protectors, gloves and workshop apron capable of stopping small abrasive or workpiece fragments. The eye protection must be capable of stopping flying debris generated by various operations. The dust mask or respirator must be capable of filtrating particles generated by your operation. Prolonged exposure to high intensity noise may cause hearing loss.

SAFETY WARNINGS SPECIFIC FOR ANGLE GRINDERS

Safety Warnings Common for Grinding, Sanding, Wire Brushing, or Abrasive Cutting-Off Operations:

The rated speed of the accessory must be at least equal to the maximum speed marked on the power tool. Accessories running faster than their rated speed can break and fly apart.

The outside diameter and the thickness of your accessory must be within the capacity rating of your power tool. Incorrectly sized accessories cannot be adequately guarded or controlled.

Threaded mounting of accessories must match the grinder spindle thread. For accessories mounted by flanges, the arbour hole of the accessory must fit the locating diameter of the flange. Accessories that do not match the mounting hardware of the power tool will run out of balance, vibrate excessively and may cause loss of controL.

Do not use a damaged accessory. Before each use inspect the accessory such as abrasive wheels for chips and cracks, backing pad for cracks, tear or excess wear, wire brush for loose or cracked wires. If power tool or accessory is dropped, inspect for damage or install an undamaged accessory. After inspecting and installing an accessory, position yourself and bystanders away from the plane of the rotating accessory and run the power tool at maximum no load speed for one minute. Damaged accessories will normally break apart during this test time.

Keep bystanders a safe distance away from work area. Anyone entering the work area must wear personal protective equipment. Fragments of workpiece or of a broken accessory may fly away and cause injury beyond immediate area of operation.

Important Safety Instructions

Hold the power tool by insulated gripping surfaces only, when performing an operation where the cutting tool may contact hidden wiring. Contact with a "live" wire will also make exposed metal parts of the power tool "live" and could give the operator an electric shock.

Never lay the power tool down until the accessory has come to a complete stop. The spinning accessory may grab the surface and pull the power tool out of your control.

Do not run the power tool while carrying it at your side. Accidental contact with the spinning accessory could snag your clothing, pulling the accessory into your body.

Regularly clean the power tool's air vents. The motor's fan will draw the dust inside the housing and excessive accumulation of powdered metal may cause electrical hazards.

Do not operate the power tool near flammable materials. Sparks could ignite these materials.

Do not use accessories that require liquid coolants. Using water or other liquid coolants may result in electrocution or shock.

KICKBACK AND RELATED WARNINGS

Kickback is a sudden reaction to a pinched or snagged rotating wheel, backing pad, brush or any other accessory. Pinching or snagging causes rapid stalling of the rotating accessory which in turn causes the uncontrolled power tool to be forced in the direction opposite of the accessory's rotation at the point of the binding.

For example, if an abrasive wheel is snagged or pinched by the workpiece, the edge of the wheel that is entering into the pinch point can dig into the surface of the material causing the wheel to climb out or kick out. The wheel may either jump toward or away from the operator, depending on direction of the wheel's movement at the point of pinching.

Abrasive wheels may also break under these conditions.

Kickback is the result of power tool misuse and/or incorrect operating procedures or conditions and can be avoided by taking proper precautions as given below.

1. Maintain a firm grip on the power tool and position your body and arm to allow you to resist kickback forces. Always use auxiliary handle, if provided, for maximum control over kickback or torque reaction during start-up. The operator can control torque reactions or kickback forces, if proper precautions are taken.
2. Never place your hand near the rotating accessory. Accessory may kickback over your hand.
3. Do not position your body in the area where the power tool will move if kickback occurs. Kickback will propel the tool in direction opposite to the wheel's movement at the point of snagging.
4. Use special care when working corners, sharp edges etc. Avoid bouncing and snagging the accessory. Corners, sharp edges or bouncing have a tendency to snag the rotating accessory and cause loss of control or kickback.
5. Do not attach a saw chain woodcarving blade or toothed saw blade. Such blades create frequent kickback and loss of control.

Important Safety Instructions

SAFETY WARNINGS SPECIFIC FOR GRINDING & ABRASIVE CUTTING-OFF OPERATIONS

Use only wheel types that are recommended for your power tool and the specific guard designed for the selected wheel. Wheels for which the power tool was not designed cannot be adequately guarded and are unsafe.

The grinding surface of centre depressed wheels must be mounted below the plane of the guard lip. An improperly mounted wheel that projects through the plane of the guard lip cannot be adequately protected.

The guard must be securely attached to the power tool and positioned for maximum safety, so the least amount of wheel is exposed towards the operator. The guard helps to protect the operator from broken wheel fragments, accidental contact with wheel and sparks that could ignite clothing.

Wheels must be used only for recommended applications. For example: do not grind with the side of cut-off wheel. Abrasive cut-off wheels are intended for peripheral grinding, side forces applied to these wheels may cause them to shatter.

Always use undamaged wheel flanges that are of correct size and shape for your selected wheel. Proper wheel flanges support the wheel thus reducing the possibility of wheel breakage. Flanges for cut-off wheels may be different from grinding wheel flanges.

Do not use worn down wheels from larger power tools. Wheel intended for larger power tool is not suitable for the higher speed of a smaller tool and may burst.

ADDITIONAL SAFETY WARNINGS SPECIFIC FOR ABRASIVE CUTTING-OFF OPERATIONS

Do not “jam” the cut-off wheel or apply excessive pressure. Do not attempt to make an excessive depth of cut. Overstressing the wheel increases the loading and susceptibility to twisting or binding of the wheel in the cut and the possibility of kickback or wheel breakage.

Do not position your body in line with and behind the rotating wheel. When the wheel, at the point of operation, is moving away from your body, the possible kickback may propel the spinning wheel and the power tool directly at you.

When wheel is binding or when interrupting a cut for any reason, switch off the power tool and hold the power tool motionless until the wheel comes to a complete stop. Never attempt to remove the cut-off wheel from the cut while the wheel is in motion otherwise kickback may occur. Investigate and take corrective action to eliminate the cause of wheel binding.

Do not restart the cutting operation in the workpiece. Let the wheel reach full speed and carefully re-enter the cut. The wheel may bind, walk up or kickback if the power tool is restarted in the workpiece.

Support panels or any oversized workpiece to minimise the risk of wheel pinching and kickback. Large workpieces tend to sag under their own weight. Supports must be placed under the workpiece near the line of cut and near the edge of the workpiece on both sides of the wheel.

Use extra caution when making a “pocket cut” into existing walls or other blind areas.

The protruding wheel may cut gas or water pipes, electrical wiring or objects that can cause kickback.

Important Safety Instructions

SAFETY WARNINGS SPECIFIC FOR SANDING OPERATIONS

Do not use excessively oversized sanding disc paper. Follow manufacturers recommendations, when selecting sanding paper. Larger sanding paper extending beyond the sanding pad presents a laceration hazard and may cause snagging, tearing of the disc or kickback.

SAFETY WARNINGS SPECIFIC FOR WIRE BRUSHING OPERATIONS

Be aware that wire bristles are thrown by the brush even during ordinary operation. Do not overstress the wires by applying excessive load to the brush. The wire bristles can easily penetrate light clothing and/or skin.

If the use of a guard is recommended for wire brushing, do not allow interference of the wire wheel or brush with the guard. Wire wheel or brush may expand in diameter due to work load and centrifugal forces.

ADDITIONAL SAFETY WARNINGS

Use appropriate detectors to determine if utility lines are hidden in the work area or call the local utility company for assistance. Contact with electric lines can lead to fire and electric shock. Damaging a gas line can lead to explosion. Penetrating a water line causes property damage.

When using depressed centre grinding wheels, be sure to use only fibreglass-reinforced wheels.

NEVER USE Stone Cup type wheels with this grinder. This grinder is not designed for these types of wheels and the use of such a product may result in serious personal injury.

Be careful not to damage the spindle, the flange (especially the installing surface) or the lock nut. Damage to these parts could result in wheel breakage.

Make sure the wheel is not contacting the workpiece before the switch is turned on.

Before using the tool on an actual workpiece, let it run for a while. Watch for vibration or wobbling that could indicate poor installation or a poorly balanced wheel.

Use the specified surface of the wheel to perform the grinding.

Do not leave the tool running. Operate the tool only when hand-held.

Do not touch the workpiece immediately after operation; it may be extremely hot and could burn your skin.

Observe the instructions of the manufacturer for correct mounting and use of wheels. Handle and store wheels with care.

Do not use separate reducing bushings or adaptors to adapt large hole abrasive wheels.

Use only flanges specified for this tool.

For tools intended to be fitted with threaded hole wheel, ensure that the thread in the wheel is long enough to accept the spindle length.

Check that the workpiece is properly supported.

Pay attention that the wheel continues to rotate after the tool is switched off.

Do not use the tool on any materials containing asbestos.

When use cut-off wheel, always work with the dust collecting wheel guard required by domestic regulation.

Cutting discs must not be subjected to any lateral pressure.

Do not use cloth work gloves during operation. Fibres from cloth gloves may enter the tool, which causes tool breakage.

Important Safety Instructions

ADDITIONAL SAFETY INSTRUCTIONS FOR BATTERIES

Only use the following batteries and chargers with this tool.

RIKA 2000mAh Li-Ion Battery: RK40B2
RIKA 4000mAh Li-Ion Battery: RK40B4
RIKA 4000mAh Li-Ion Battery: RK40TB4

RIKA 2.4A Fast Charger: RK40FC2
RIKA 4.0A Fast Charger: RK40FC4
RIKA 4.5A Dual Fast Charger: RK40DFC4

Battery packs are shipped in a low charge condition. You should charge a battery pack fully before use.

Do not incinerate a battery pack even if it is seriously damaged or can no longer hold a charge. A battery pack can explode in a fire.

A small leakage of liquid from the battery pack may occur under extreme usage or temperature conditions. This does not necessarily indicate a failure of the battery pack. However, if the outer seal is broken and this leakage comes into contact with your skin wash the affected area quickly with soap and water. If the leakage gets in your eyes flush your eyes with clean water for a minimum of 10 minutes and seek immediate medical attention.

Never attempt to open a battery pack for any reason. If the plastic housing a battery pack breaks open or cracks, immediately discontinue its use and do not recharge it.

Do not store or carry a spare battery pack in a pocket or toolbox or any other place where it may come into contact with metal objects. The battery pack may be short-circuited causing damage to the battery pack, burns or a fire.

CHARGING BATTERIES

When charging a new battery pack it should be fully discharged followed by a full charge for the charging rate for the battery as stated in its product manual plus 30 minutes. This should then be followed by a full discharge and a further full charge for the charging rate for the battery as stated in its product manual plus 30 minutes. This procedure will condition the battery and equalise the cell voltages. Following this procedure will ensure the optimum operation of the battery.

When repeatedly using a charger to charge a number of batteries always allow the charger to cool down before charging another battery. It is recommended that the cooling down period is not less than 30 to 45 minutes.

When charging a battery that has been discharged during heavy use allow the battery to cool down before charging. It is recommended that the cooling down period is not less than 30 to 45 minutes.

Battery packs need to be recharged with a reasonable amount of care, largely because they can be damaged by overcharging.

Overcharging can result in the battery temperature and internal pressure to rise rapidly. This can cause the cells to distort and lose electrolyte, and in extreme cases where the internal pressure is extremely high they can even explode.

This situation can also arise when an overcharged battery is fitted to the product and is being used. In order to avoid this extreme situation it is of vital importance that NiCad and/or Li-Ion batteries are fully discharged before charging and that the charge time is not exceeded except when “Conditioning” a new battery. Repeated charging of partially discharged batteries could cause failure of one or more of the cells.

SELF DISCHARGE

A lithium battery can self discharge and lose its stored charge. Typically it can lose approximately 5% of its charge in the first month after fully charging (when stored at

room temperature), and then loses it by a further 3% per month. When stored at higher temperatures the self discharge rate will be accelerated.

BATTERY CHARGING INDOORS

Chargers are designed to be used indoors. We do not recommend that chargers are used inside your home. Ideally batteries should be charged on a bench in a workshop, garage or shed. If the charging operation is to be carried out in your home the area must be well ventilated and the charger must be placed on a non combustible surface ensuring that the ventilation slots are not blocked.

Never exceed the charging time except when “Conditioning” a new battery, as this could damage a battery and charger.

BATTERY DISPOSAL

When a battery fails to charge or maintain its charge, its usable life is exhausted. To preserve natural resources, please recycle or dispose of a battery pack properly. Before disposal ensure that the battery pack is fully discharged by operating your cordless product, then remove the battery pack from the tool housing and cover the battery pack connections with heavy duty tape, to prevent short circuit and energy discharge which could result in a fire. Do not attempt to open or remove any of the components.

Consult your local waste authority for information regarding available recycling and / or disposal options.

SPECIFIC SAFETY INSTRUCTIONS

RE-CHARGEABLE BATTERIES

Batteries may leak or explode if not charged or handled correctly. Always observe the following precautions when handling batteries. Ensure that the machine is switched off before removing or fitting batteries.

Do not use a battery with any other product that is not recommended.

Do not attempt to fit a battery the wrong way round.

Do not short out, or attempt to dismantle a battery.

Do not expose a battery to flames or excessive heat.

Do not immerse in or expose a battery to water.

Do not store or transport a battery with loose metal objects such drill and driver bits.

Batteries are prone to leakage when discharged. To avoid damage to the product, remove or re-charge the battery when no charge remains. Store the battery in a cool place when not in use.

After prolonged use a battery may become hot. Before removing a battery, switch the machine off and allow the battery to cool down. Do not use the battery if you notice any discolouration or distortion of the battery casing.

RESIDUAL RISKS

Even when the unit is used as prescribed it is not possible to eliminate all residual risk factors. The following hazards may arise in connection with the unit’s construction and design:

1. Damage to hearing caused by noise. Wear suitable hearing protection and limit exposure.
2. Injury to the eyes. Wear protective eye shields or goggles when using the product.
3. Injury caused by vibration. Limit exposure. Follow the instructions in Risk Reduction.
4. Electric shock caused by contact with hidden wires. Hold the product only by insulated services.

Important Safety Instructions

5. Injury caused by dust. Dust created by operating the product can cause respiratory injury. Wear appropriate dust control mask with filters suitable for protecting against particles from the material being worked on.

RISK REDUCTION

It has been reported that vibrations from handheld tools may contribute to a condition called Raynaud's Syndrome in certain individuals. Symptoms may include tingling, numbness, and blanching of the fingers, usually apparent upon exposure to cold.

Hereditary factors, exposure to cold and dampness, diet, smoking and work practices are all thought to contribute to the development of these symptoms. There are measures that can be taken by the operator to possibly reduce the effects of vibration:

Keep your body warm in cold weather. When operating the unit, wear gloves to keep the hands and wrists warm.

It is reported that cold weather is a major factor contributing to Raynaud's Syndrome.

After each period of operation, exercise to increase blood circulation.

Take frequent work breaks. Limit the amount of exposure per day.

If you experience any of the symptoms of this condition, immediately discontinue use and see your doctor about these symptoms.

WARNING! Injuries may be caused, or aggravated, by prolonged use of a tool. When using any tool for prolonged periods, ensure you take regular breaks.

WARNING

This unit produces an electromagnetic field during operation. This field may under some circumstances interfere with active or passive medical implants. To reduce the risk of serious or fatal injury, we recommend persons with medical implants to consult their physician and the medical implant manufacturer before operating this unit.

GENERAL SAFETY RULES

WARNING! Read all instructions Failure to follow all instructions listed below may result in electric shock, fire and/or serious injury. The term "power tool" in all of the warnings listed below refers to your mains operated (corded) power tool or battery operated (cordless) power tool.

SAVE THESE INSTRUCTIONS

1) WORK AREA

a) **Keep work area clean and well lit.** Cluttered and dark areas invite accidents.

b) **Do not operate power tools in explosive atmospheres, such as in the presence of flammable liquids, gases or dust.** Power tools create sparks which may ignite the dust or fumes.

c) **Keep children and bystanders away while operating a power tool.** Distractions can cause you to lose control.

2) ELECTRICAL SAFETY

a) **Power tool plugs must match the outlet. Never modify the plug in any way. Do not use any adapter plugs with earthed (grounded) power tools.** Unmodified plugs and matching outlets will reduce risk of electric shock.

b) **Avoid body contact with earthed or grounded surfaces such as pipes, radiators, ranges and refrigerators.** There is an increased risk of electric shock if your body is earthed or grounded.

Important Safety Instructions

c) **Do not expose power tools to rain or wet conditions.** Water entering a power tool will increase the risk of electric shock.

d) **Do not abuse the cord. Never use the cord for carrying, pulling or unplugging the power tool. Keep cord away from heat, oil, sharp edges or moving parts.** Damaged or entangled cords increase the risk of electric shock.

e) **When operating a power tool outdoors, use an extension cord suitable for outdoor use.** Use of a cord suitable for outdoor use reduces the risk of electric shock.

f) **If operating a power tool in a damp location is unavoidable, use a residual current device (RCD) protected supply.** Use of an RCD reduces the risk of electrical shock.
NOTE: The term “residual current device (RCD)” can be replaced by the term “ground fault circuit interrupter (GFCI)” or “earth leakage circuit breaker (ELCB)”.

3) PERSONAL SAFETY

a) **Stay alert, watch what you are doing and use common sense when operating a power tool. Do not use a power tool while you are tired or under the influence of drugs, alcohol or medication.** A moment of inattention while operating power tools may result in serious personal injury.

b) **Use personal protective equipment. Always wear eye protection.** Safety equipment such as dust mask, non-skid safety shoes, hard hat, or hearing protection used for appropriate conditions will reduce personal injuries.

c) **Prevent unintentional starting. Ensure the switch is in the off-position before connecting to power source and/or battery pack, picking up or carrying the tool.** Carrying power tools with your finger on the switch or energising power tools that have the switch on invites accidents.

d) **Remove any adjusting key or wrench before turning the power tool on.** A wrench or a key left attached to a rotating part of the power tool may result in personal injury.

e) **Do not overreach. Keep proper footing and balance at all times.** This enables better control of the power tool in unexpected situations.

f) **Dress properly. Do not wear loose clothing or jewellery. Keep your hair, clothing and gloves away from moving parts.** Loose clothes, jewellery or long hair can be caught in moving parts.

g) **If devices are provided for the connection of dust extraction and collection facilities, ensure these are connected and properly used.** Use of these devices can reduce dust related hazards.

h) **Do not let familiarity gained from frequent use of tools allow you to become complacent and ignore tool safety principles.** A careless action can cause severe injury within a fraction of a second.

4) POWER TOOL USE AND CARE

a) **Do not force the power tool. Use the correct power tool for your application.** The correct power tool will do the job better and safer at the rate for which it was designed.

b) **Do not use the power tool if the switch does not turn it on and off.** Any power tool that cannot be controlled with the switch is dangerous and must be repaired.

Important Safety Instructions

c) **Disconnect the plug from the power source and/or the battery pack from the power tool before making any adjustments, changing accessories, or storing power tools.** Such preventive safety measures reduce the risk of starting the power tool accidentally.

d) **Store idle power tools out of the reach of children and do not allow persons unfamiliar with the power tool or these instructions to operate the power tool.** Power tools are dangerous in the hands of untrained users.

e) **Maintain power tools. Check for misalignment or binding of moving parts, breakage of parts and any other condition that may affect the power tools operation. If damaged, have the power tool repaired before use.** Many accidents are caused by poorly maintained power tools.

f) **Keep cutting tools sharp and clean.** Properly maintained cutting tools with sharp cutting edges are less likely to bind and are easier to control.

g) **Use the power tool, accessories and tool bits etc., in accordance with these instructions and in the manner intended for the particular type of power tool, taking into account the working conditions and the work to be performed.** Use of the power tool for operations different from intended could result in a hazardous situation.

h) **Keep handles and grasping surfaces dry, clean and free from oil and grease.** Slippery handles and grasping surfaces do not allow for safe handling and control of the tool in unexpected situations.

i) **When using the tool, do not wear cloth work gloves which may be entangled.** The entanglement of cloth work gloves in the moving parts may result in personal injury.

5) BATTERY TOOL USE AND CARE

a) **Recharge only with the charger specified by the manufacturer.** A charger that is suitable for one type of battery pack may create a risk of fire when used with another battery pack.

b) **Use power tools only with specifically designated battery packs.** Use of any other battery packs may create a risk of injury and fire.

c) **When battery pack is not in use, keep it away from other metal objects, like paper clips, coins, keys, nails, screws or other small metal objects, that can make a connection from one terminal to another.** Shorting the battery terminals together may cause burns or a fire.

d) **Under abusive conditions, liquid may be ejected from the battery; avoid contact. If contact accidentally occurs, flush with water. If liquid contacts eyes, additionally seek medical help.** Liquid ejected from the battery may cause irritation or burns.

6) SERVICE

a) **Have your power tool serviced by a qualified repair person using only identical replacement parts.** This will ensure that the safety of the power tool is maintained.

b) **Never service damaged battery packs.** Service of battery packs should only be performed by the manufacturer or authorised service providers.

c) **Follow instruction for lubricating and changing accessories.**

Safety Symbols

Some of the following symbols may be used on this product. Please study them and learn their meaning. Proper interpretation of these symbols will allow you to operate the product better and safer.

SYMBOL	DESIGNATION/EXPLANATION
	Indicates danger, warning or caution. It means attention!!! Your safety is involved.
	Your manual contains special messages to bring attention to potential safety concerns as well as operating and servicing information. Please read all the information carefully to ensure satisfaction and safe use.
	Wear eye, hearing and head protection when operating this equipment.
	Two Handed Operation. Always hold your angle grinder with one hand on the rear handle and other hand firmly around the auxiliary handle.
	Do not expose to rain or use in damp locations.
	Waste electrical products should not be disposed of with household waste. Please recycle where facilities exist. Check with your Local Authority or retailer for recycling advice.
CE UK CA	Conforms to relevant safety standards.

Technical Specification

Rated Voltage:	40V DC
Motor:	Brushless
No Load Speed:	3000-9000/min
Wheel Diameter:	125mm
Wheel Bore Size:	22.2mmØ
Max. Wheel Thickness:	6mm
Spindle Thread:	M14
Sound Pressure Level:	L_{PA} 83.7 dB(A), K=3dB(A)
Sound Power Level:	L_{WA} 91.7 dB(A), K=3dB(A)
Vibration Level:	2.451m/s^2, K=1.5m/s^2
Weight:	2.0kg

Components & Controls

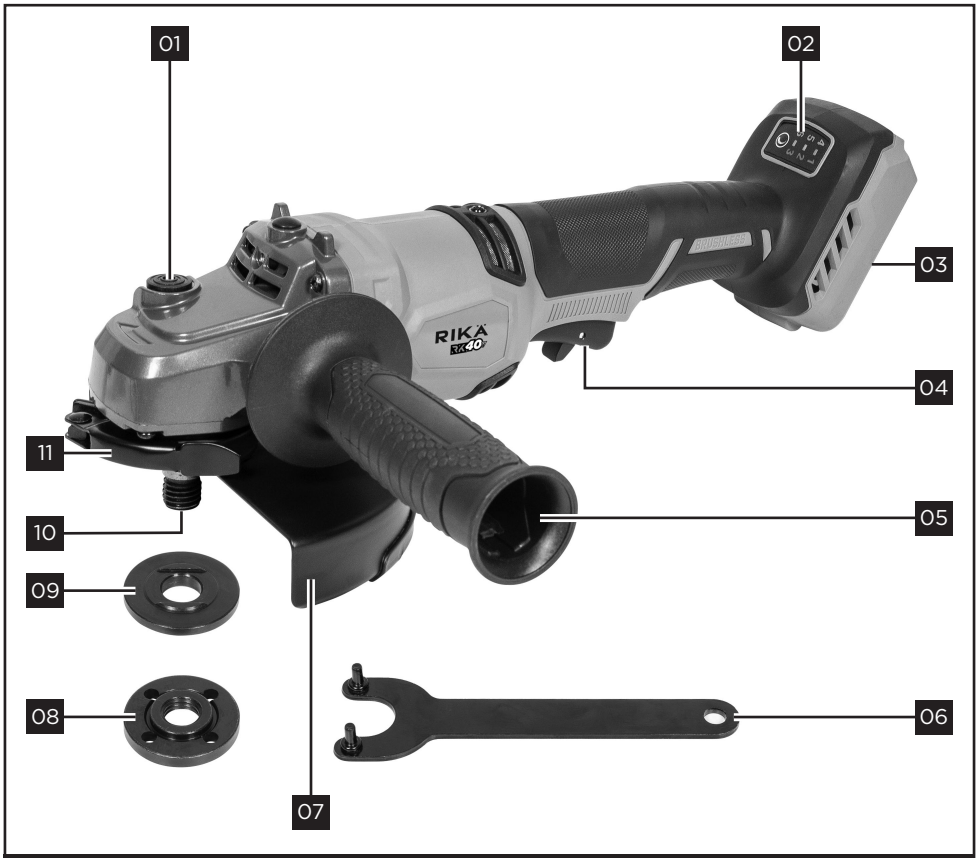

01. Spindle lock button
02. Speed selector button/display
03. Battery mount
04. On/Off trigger with safety lever
05. Auxiliary handle
06. 2 pin wrench
07. Wheel guard
08. Wheel locking nut
09. Inner flange
10. Spindle
11. Wheel guard clamp lever

Intended Use

The tool is intended for grinding, sanding and cutting of metal and stone materials without the use of water.

Any other application beyond the conditions established for use will be considered misuse. RIKA accepts no responsibility for improper use of this product.

Unpacking

CAUTION. This packaging contains sharp objects. Take care when unpacking. Remove the machine, together with the accessories supplied, from the packaging. Check carefully to ensure that the machine is in good condition and account for all the accessories listed in this manual. Also make sure that all the accessories are complete.

If any parts are found to be missing, the machine and its accessories should be returned together in their original packaging to the retailer. Do not throw the packaging away, keep it safe throughout the guarantee period, then recycle if possible, otherwise dispose of it by the proper means. Do not let children play with empty plastic bags due to the risk of suffocation.

Assembly & Adjustments

WARNING! Do not use this product if it is not completely assembled or if any parts appear to be missing or damaged. Use of a product that is not properly and completely assembled or with damaged or missing parts could result in serious personal injury.

WARNING! Do not attempt to modify this product or create accessories or attachments not recommended for use with this product. Any such alteration or modification is misuse and could result in a hazardous condition leading to possible serious personal injury.

WARNING! To reduce the risk of injury, turn unit off and disconnect the battery pack from the machine before installing and removing accessories, before adjusting or changing setups or when making repairs. Be sure the On/Off slide switch is in the OFF position. An accidental start-up can cause injury.

INSTALLING THE WHEEL GUARD

WARNING! When using a depressed centre grinding wheel/ Multi-disc, flex wheel, cut-off wheel or diamond wheel, the wheel guard must be fitted on the tool so that the closed side of the guard always points toward the operator.

WARNING! When using an abrasive cut-off/ diamond wheel, be sure to use only the special wheel guard designed for use with cut-off wheels.

Turn the angle grinder upside down to install the wheel guard.

Unlock the wheel guard clamping lever, Fig.1

Fig.1

Assembly & Adjustments

Mount the wheel guard with the protrusion on the wheel guard band aligned with the notch on the bearing box marked A on Fig.2.

Fig.2

Rotate the wheel guard clockwise to such an angle that it can protect the operator according to work and then lock the wheel guard clamp lever, Fig.3. Make sure the wheel guard is securely fixed in place.

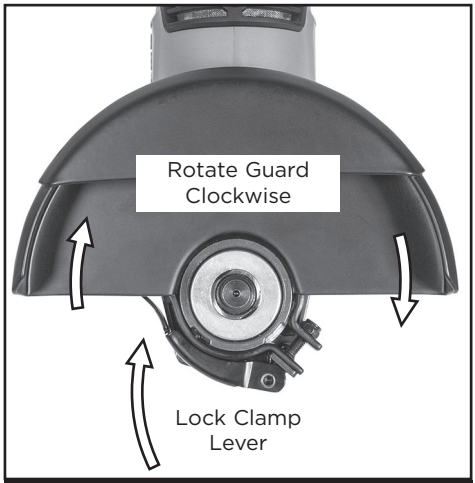

Fig.3

To remove the wheel guard, follow the installation procedure in reverse.

NOTE: The wheel guard must be fitted to the Angle Grinder at all times during use.

INSTALLING OR REMOVING DEPRESSED CENTRE GRINDING WHEELS OR FLAP DISCS (NOT SUPPLIED)

WARNING! To reduce the risk of serious personal injury, disconnect the battery pack from the tool before installing a grinding wheel or flap disc.

WARNING! When using a depressed centre grinding wheel or flap disc, the wheel guard must be fitted on the tool so that the closed side of the guard always points toward the operator.

CAUTION. Make sure that the mounting part of the inner flange fits into the inner diameter of the depressed centre grinding wheel/ flap disc perfectly. Mounting the inner flange on the wrong side may result in the dangerous vibration.

With the angle grinder turned onto its back mount the inner flange onto the spindle. It must be installed the correct way with the two straight edges facing downwards and lined up with the flats on the shaft.

Next place the grinding wheel onto the inner flange. The grinding wheel should be installed with the writing facing upwards so it is visible when the angle grinder is turned the correct way up.

Screw the wheel locking nut to the spindle with its protrusion facing downward (facing toward the disc).

Finger tighten the wheel locking nut until the grinding wheel is secure, Fig.4.

Assembly & Adjustments

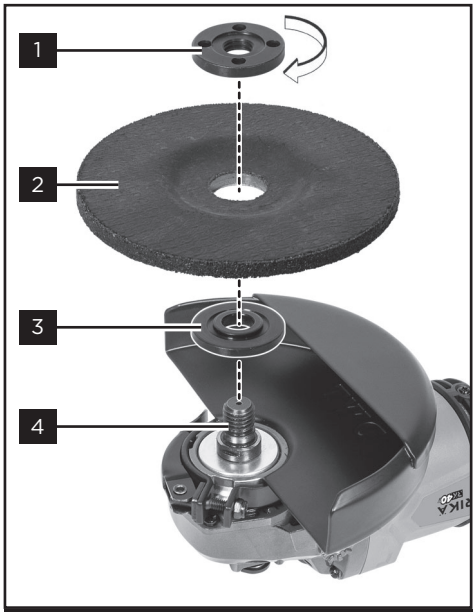

Fig.4

1. Wheel locking nut
2. Depressed centre grinding wheel or Flap disc
3. Inner flange
4. Spindle thread

To fully secure the grinding wheel locate and depress the spindle lock button and using the supplied 2 pin wrench, Fig.5,

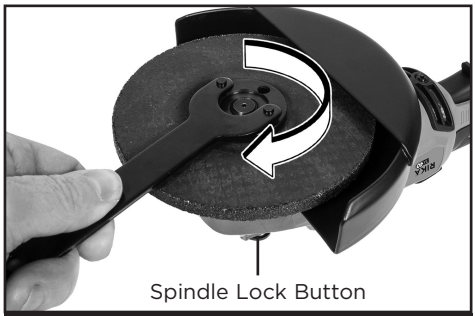

Fig.5

tighten the wheel locking nut in a clockwise direction until the wheel is firmly clamped. Do not over tighten.

To remove the wheel, follow the installation procedure in reverse.

INSTALLING OR REMOVING ABRASIVE CUT-OFF WHEELS (NOT SUPPLIED)

WARNING! To reduce the risk of serious personal injury, disconnect the battery pack from the tool before installing a cut-off wheel.

WARNING! When using an abrasive cut-off/diamond wheel, be sure to use only the special wheel guard designed for use with cut-off wheels.

WARNING! Do not "jam" the wheel or apply excessive pressure. Do not attempt to make an excessive depth of cut. Overstressing the wheel increases the loading and susceptibility to twisting or binding of the wheel in the cut and the possibility of kickback, wheel breakage and overheating of the motor may occur.

WARNING! Do not start the cutting operation in the workpiece. Let the wheel reach full speed and carefully enter into the cut moving the tool forward over the workpiece surface. The wheel may bind, walk up or kickback if the power tool is started in the workpiece.

WARNING! During cutting operations, never change the angle of the wheel. Placing side pressure on the cut-off wheel (as in grinding) will cause the wheel to crack and break, causing serious personal injury.

Assembly & Adjustments

WARNING! NEVER use a cut-off wheel for side grinding.

WARNING! A diamond wheel shall be operated perpendicular to the material being cut.

CAUTION. Make sure that the mounting part of the inner flange fits into the inner diameter of the cut-off wheel perfectly. Mounting the inner flange incorrectly may result in the dangerous vibration.

With the angle grinder turned onto its back mount the inner flange onto the spindle. It must be installed the correct way with the two straight edges facing downwards and lined up with the flats on the shaft.

Next place the cut-off wheel onto the protrusion of the inner flange. The cut-off wheel should be installed with the writing facing upwards so it is visible when the angle grinder is turned the correct way up.

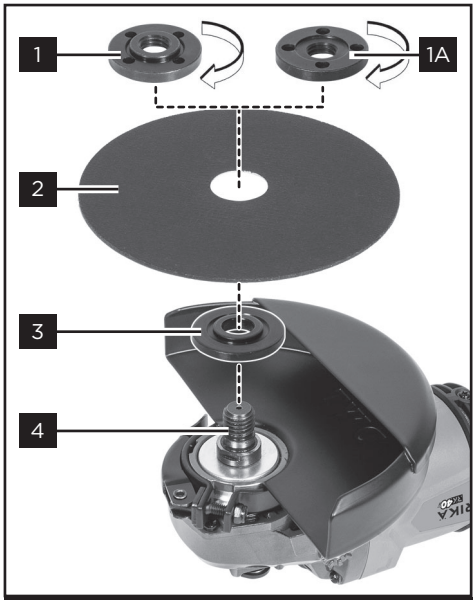

Fig.6

Screw the wheel locking nut to the spindle. The direction for mounting the wheel locking nut and the varies by wheel type and thickness, Fig.6.

1. Wheel locking nut (Protrusion facing upwards if cut-off wheel thinner than 4mm)
1A. Wheel locking nut (Protrusion facing downwards if cut-off wheel thicker than 4mm)
2. Abrasive cut-off wheel
3. Inner flange
4. Spindle thread

Finger tighten the wheel locking nut until the cut-off wheel is secure.

To fully secure the cut-off wheel locate and depress the spindle lock button and using the supplied 2 pin wrench, Fig.5, tighten the wheel locking nut in a clockwise direction until the cut-off wheel is firmly clamped. Do not over tighten.

To remove the cut-off wheel, follow the installation procedure in reverse.

INSTALLING OR REMOVING ABRASIVE DISC (NOT SUPPLIED)

WARNING! To reduce the risk of serious personal injury, disconnect the battery pack from the tool before installing an abrasive disc.

Remove the wheel guard.

Turn the angle grinder onto its back and mount the sanding plate onto the spindle.

Centre the abrasive disc on the sanding plate and screw the sanding lock nut clockwise onto the spindle, Fig.7.

1. Sanding lock nut
2. Abrasive disc
3. Sanding plate
4. Spindle thread

Assembly & Adjustments

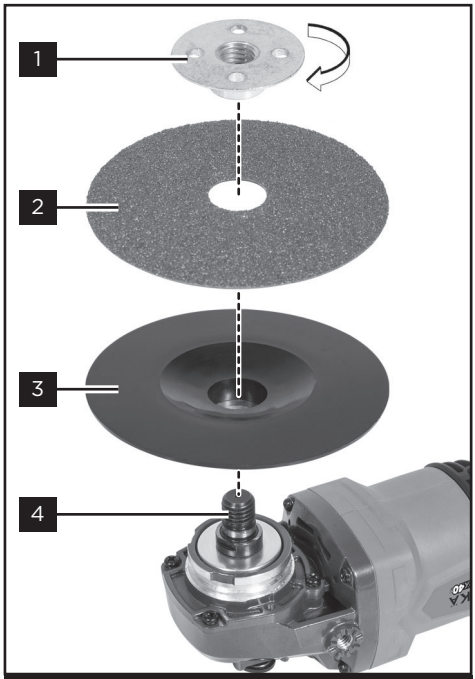

Fig.7

To fully secure the abrasive disc locate and depress the spindle lock button and using the supplied 2 pin wrench, Fig.8, tighten the sanding lock nut in a clockwise direction until the abrasive disc is firmly clamped. Do not over tighten.

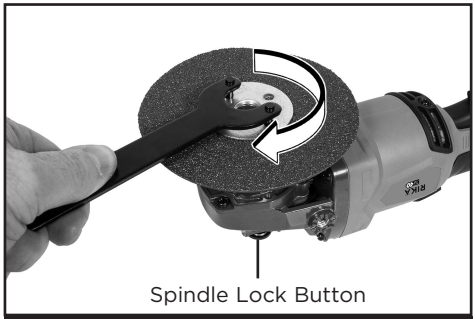

Fig.8

To remove the abrasive disc, follow the installation procedure in reverse.

INSTALLING A RIKA BATTERY PACK

WARNING! Always remove battery pack from your tool when you are assembling parts, making adjustments, cleaning, carrying, transporting or when not in use. Removing battery pack will prevent accidental starting that could cause serious personal injury.

Slide the battery pack into the battery mount, Fig.9.

Fig.9

NOTE: The battery has raised ribs which allows it to fit into the tool only one way. Make sure the battery pack snaps into place and that battery pack is secured in the tool before beginning operation. Improper installation of the battery pack can cause damage to internal components.

REMOVING THE BATTERY PACK

Locate the battery release catch on the top of the battery and press downwards, Fig.10. Whilst holding down the battery release catch slide the battery pack away from the tool.

Assembly & Adjustments

Fig.10

INSTALLING THE AUXILIARY HANDLE

CAUTION. Always make sure that the auxiliary handle is installed securely before operation.

The auxiliary handle can be installed in three different positions to suit the operator.

Screw the auxiliary handle securely on the position of the tool as shown in Fig.11.

Do not over tighten.

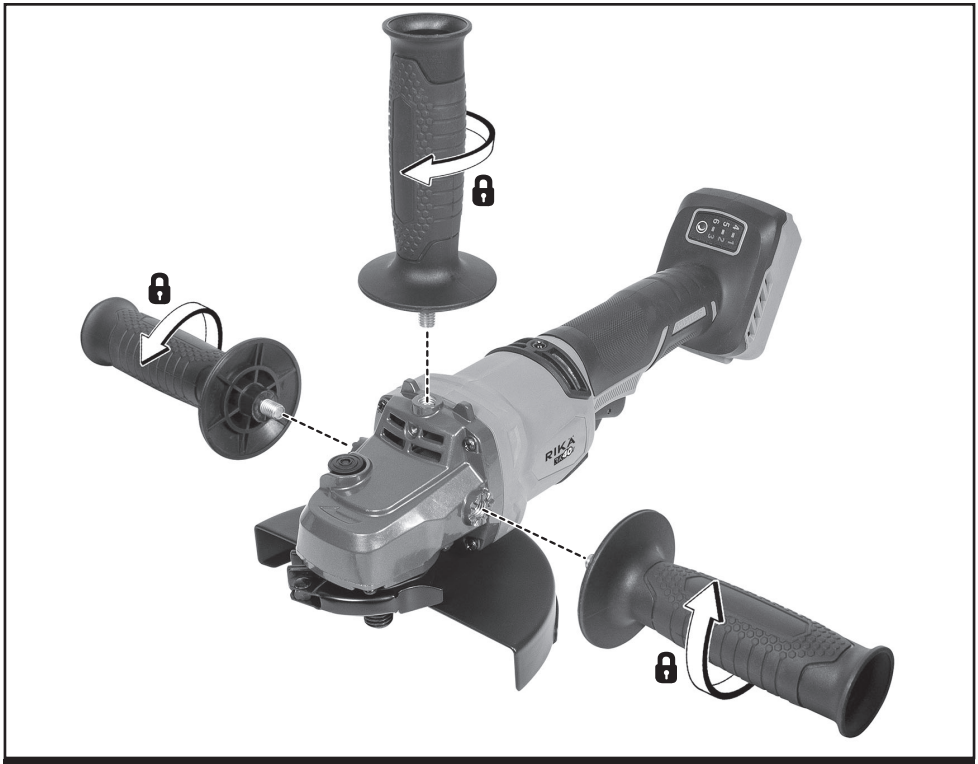

Fig.11

Operation

TURNING THE ANGLE GRINDER ON/OFF

CAUTION. Before installing the battery cartridge into the tool, always check to see that the On/Off trigger actuates properly and returns to the "OFF" position when the trigger is released.

To start the tool, pull back the safety lever towards the rear of the machine and then squeeze the On/Off trigger, Fig.12.

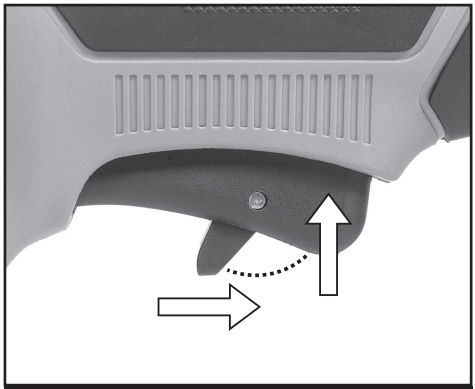

Fig.12

To stop the tool, release the trigger.

SOFT START FEATURE

The soft start feature allows the motor to gradually ramp up to full speed over 1-2 seconds, preventing the initial violent jerk, "kickback," and high power surge upon activation. It reduces strain on the motor/gears, improves operator control, reduces vibration, and prevents breakers from tripping.

ELECTRIC BRAKE

The electric brake is activated after the tool is switched off. The brake does not work when the power supply is shut down, such as the battery is removed accidentally, with the switch still on.

SPEED SELECTOR BUTTON

This angle grinder has a six speed settings. This feature limits the maximum speed the angle grinder can reach when the trigger is depressed. Setting 1 is the lowest speed and setting 6 is the maximum speed.

To select a speed:

1. Short press the On/Off trigger. The speed selection indicators will illuminate.
2. The tool speed can be adjusted between 3000 and 9000 revolutions per minute. Press the speed selector button and choose the speed setting you require, Fig.13.

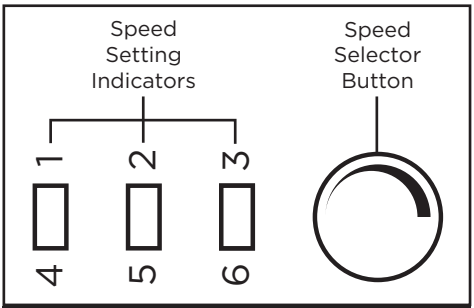

Fig.13

The lower 1 to 3 speed settings are illuminate red.

The higher 4 to 6 speed settings are illuminate green.

NOTE: If the tool is operated continuously at low speed for a long time, the motor will get overloaded, resulting in tool malfunction.

USING THE ANGLE GRINDER

WARNING! It should never be necessary to force the tool. The weight of the tool applies adequate pressure. Forcing and excessive pressure could cause dangerous wheel breakage.

Operation

WARNING! ALWAYS replace the wheel if the tool is dropped while grinding.

WARNING! NEVER bang or hit the grinding disc or wheel onto the workpiece.

WARNING! Avoid bouncing and snagging the wheel, especially when working corners, sharp edges etc. This can cause loss of control and kickback.

WARNING! NEVER use the tool with wood cutting blades and other saw blades. Such blades when used on a grinder frequently kick and cause loss of control leading to personal injury.

CAUTION. Never switch on the tool when it is in contact with the workpiece, it may cause an injury to the operator.

CAUTION. Always wear safety goggles or a face shield during operation.

CAUTION. After operation, always switch off the tool and wait until the wheel has come to a complete stop before putting the tool down.

CAUTION. ALWAYS hold the tool firmly with one hand on housing and the other on the auxiliary handle.

GRINDING AND SANDING OPERATION

Hold your angle grinder with one hand on the rear handle and other hand firmly around the auxiliary handle.

Always position the guard so that as much of the exposed wheel as possible is pointing away from you.

Be prepared for a stream of sparks when the wheel touches the metal.

Turn the tool on and then apply the wheel or disc to the workpiece.

In general, keep the edge of the wheel or disc at an angle of about 15° to the workpiece surface, Fig.14.

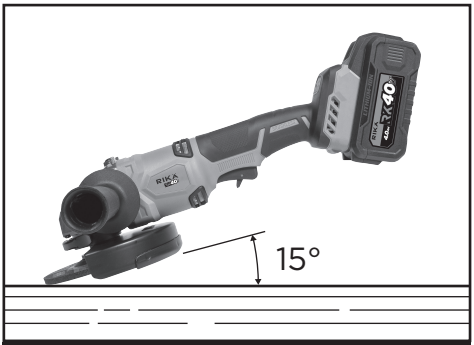

Fig.14

During the break-in period with a new wheel, do not work the grinder in forward direction or it may cut into the workpiece.

Once the edge of the wheel has been rounded off by use, the wheel may be worked in both forward and backward direction.

Use caution when working into corners as contact with the intersecting surface may cause the grinder to jump or twist.

When grinding is complete allow the workpiece to cool. Do not touch the hot surface.

During use it is advisable to periodically check the security of the wheel locking nut, auxiliary handle and wheel guard.

Be aware that grinding metal can cause harmful dust particles that will damage your respiratory system and it is advised that an approved dust mask is obtained from a reputable dealer.

Operation

NEVER immerse the grinding wheel into any type of lubricant including water. The Angle Grinder is a dry grinder. Failure to observe will result in a fatal electric shock.

The guard is adjustable for different types of work. Always position the guard so it deflects the sparks away from the operators eyes. See safety instructions for additional protective equipment.

Maintenance

WARNING! Always be sure that the tool is switched off and the battery pack is removed before attempting to perform inspection or maintenance.

This power tool normally requires no maintenance; from time to time the ventilation slots on the motor casing should be cleaned out. If the unit should become defective, repair should be performed by an authorised service agent for electric tools.

Ventilation openings and switch levers must be kept clean and free of foreign matter. Do not attempt to clean by inserting pointed objects through openings.

Before installing a grinding wheel, remove all abrasive dust and debris that has accumulated.

The tool may be cleaned most effectively with compressed dry air especially around the blade guard where dust and debris gather. Always wear safety goggles when cleaning tools with compressed air.

WARNING! Always wear safety goggles or safety glasses with side shields during power tool operation or when blowing dust. If operation is dusty, also wear a dust mask.

Inspect the general condition of the angle grinder. Check for loose screws and bolts, misalignment or binding of moving parts, cracked or broken parts, damaged electrical wiring and any other condition that may effect its safe use. If abnormal noise or vibration occurs have the machine inspected by an authorised service agent.

Check that all safety features and guards are operating correctly on a regular basis. Only use this machine if all guards/safety features are fully operational.

Avoid using solvents when cleaning plastic parts. Most plastics are susceptible to damage from various types of commercial solvents and may be damaged by their use. Use clean damp cloths to remove dirt, dust, oil, grease, etc.

WARNING! Do not at any time let brake fluids, gasoline, petroleum based products, penetrating oils, etc., come in contact with plastic parts. Chemicals can damage, weaken or destroy plastic which may result in serious personal injury.

Electric tools used on fibreglass material, wallboard, spackling compounds, or plaster are subject to accelerated wear and possible premature failure because the fibreglass chips and grindings are highly abrasive to bearings, brushes, commutators, etc.

Consequently, we do not recommended using this tool for extended work on these types of materials. However, if you do work with any of these materials, it is extremely important to clean the tool using compressed air.

Maintenance

LUBRICATION
All of the bearings in this tool are lubricated with a sufficient amount of high grade lubricant for the life of the unit under normal operating conditions. Therefore, no further lubrication is required.

Service

Now that you have purchased your tool, should a need ever exist of repair or service, simply contact your nearest RIKA Authorised Service Centre or other qualified service organisation. Be sure to provide all pertinent facts when you call or visit.

Environmental Protection

Information for (private householders) for the environmentally responsible disposal of Waste Electrical and Electronic Equipment (WEEE)

This symbol on products and or accompanying documents indicates that used and end of life electrical and electronic equipment should not be disposed of in household waste. For the proper disposal, treatment, recovery and recycling, please take these products to designated collection points, where they will be accepted on a free of charge basis. Alternatively, in some countries you may be able to return your products to your retailer upon the purchase of an equivalent new product. Disposing of this product correctly will help to save valuable resources and prevent any potential adverse effects on human health and the environment which could otherwise arise from inappropriate waste disposal and handling. Please contact your local authority for further details of your nearest designated collection point. Penalties may be applicable for incorrect disposal of this waste in accordance with national legislation.

FOR BUSINESS USERS IN THE EUROPEAN UNION.
If you wish to discard electrical and electronic equipment, please contact your dealer or supplier for further information.

Information on Disposal in other Countries outside the European Union.
This Symbol is only valid in the European Union.
If you wish to dispose of this product, please contact your local authorities or dealer and ask for the correct method of disposal.

Notes

Notes

Notes

EC Declaration of Conformity

1. **Product model:** RK40SAG125B

2. **Name and address of the manufacturer or his authorised representative:**

RIKÄ

SGS Engineering (UK) Ltd
Unit 1 West Side Park, Raynesway,
Derby, DE21 7AZ

3. **This declaration of conformity is issued under the sole responsibility of the manufacturer.**

4. **Object of the declaration:**

   Equipment: 40V Cordless Angle Grinder
   Brand name: RIKA
   Model/type: RK40SAG125B

5. **The object of the declaration described above is in conformity with the relevant statutory requirements:**

Supply of Machinery (Safety) Regulations 2008 Electrical Equipment (Safety) Regulations 2016 Electromagnetic Compatibility Regulations 2016 The Restriction of the Use of Certain Hazardous Substances in Electrical and Electronic Equipment Regulations 2012

6. **References to the relevant designated standards used or references to the other technical specifications in relation to which conformity is declared:**

BS EN55014-1	BS EN62841-1
BS EN55014-2	BS EN62841-2-3

7. **The person authorised to compile the technical file:**

   Name: Neil Sansom
   Address: SGS Engineering (UK) Ltd, Unit 1 West Side Park, Raynesway, Derby, DE21 7AZ

   Signed for and on behalf of:

   Authorised Representative

   Neil Sansom, CEO
   Date: 19/02/2026

UK CA 26